# LIVV DOWNLIGHT

Remodel Pre-mount Plate (PMP)

Lumenwerx

## INSTALLATION INSTRUCTIONS

This product must be installed in accordance with the National Electrical Code and all applicable local codes, by a person familiar with the construction and operation of the product, and the hazards involved. Proper grounding is required for safety.

Ce produit doit être installé suivant le code national de l'électricité, ainsi que tous les codes locaux applicables, par une personne familière avec la construction et le fonctionnement du produit, ainsi que tous les risques qui y sont associés. La mise à terre électrique est obligatoire pour la sécurité.

Disconnect power before installation or servicing.

Wire dimming conductors as Class 1.

Do not cover the light element lens or heatsink with any materials or adhesive tapes when the fixture is powered.

A luminaire with more than one power supply connection means shall be connected to only one branch circuit.

For electrical connections, please refer to the wiring diagram guide.

Installation steps are shown with LIVV 2.5", also applicable for LIVV 3.5".

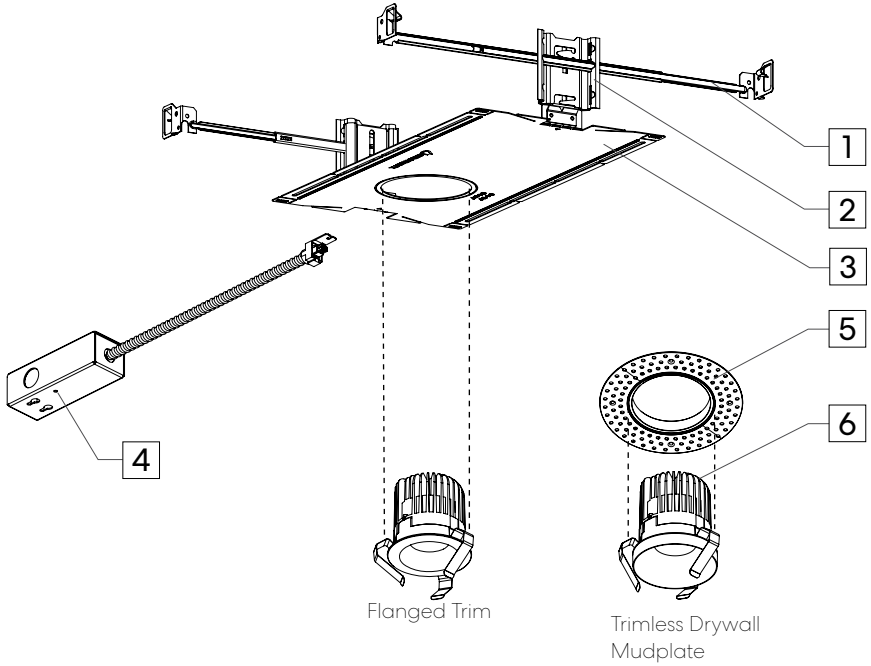


INDEX


| | |
|---|---|
| Installation type | P.2 |
| Housing installation | P.3 |
| Electrical connection | P.5 |
| Ceiling Preparation | P.6 |
| Light Element | P.7 |


ITEMS LIST

| | |
|---|---|
| 1 | Bar hangers |
| 2 | Caterpillar bracket |
| 3 | Pre-mount plate |
| 4 | Connection box with connection adapter |
| 5 | Mudplate |
| 6 | Light element |

TOOLS REQUIRED

- Phillips screwdriver
- Hole saw



© All rights are reserved to Lumenwerx ULC.
Lumenwerx ULC. reserves the right to change or modify product specifications without notification.

# LIVV DOWNLIGHT

Remodel Pre-mount Plate (PMP)

## INSTALLATION TYPE

### PMP + BAR HANGER - REMODEL PRE-MOUNT PLATE

Minimum plenum height - 4" (FMB); 4 3/16" (ASB, ACB)
Minimum 3" setback from insulation around all sides and top

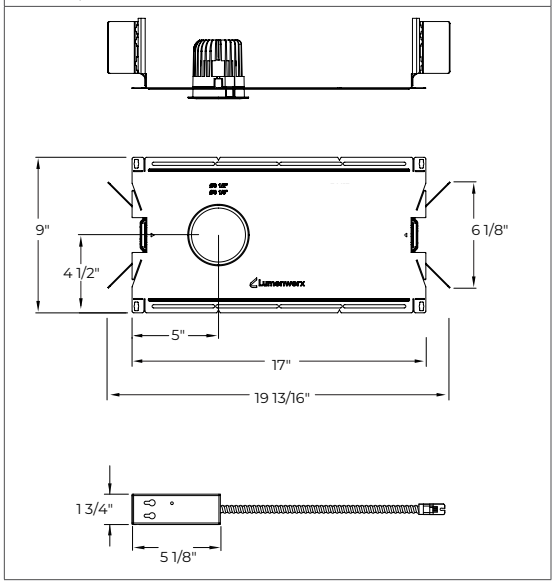


### PMP + NA - REMODEL PRE-MOUNT PLATE WITHOUT BAR HANGERS

Minimum plenum height - 4"
Minimum 3" setback from insulation around all sides and top

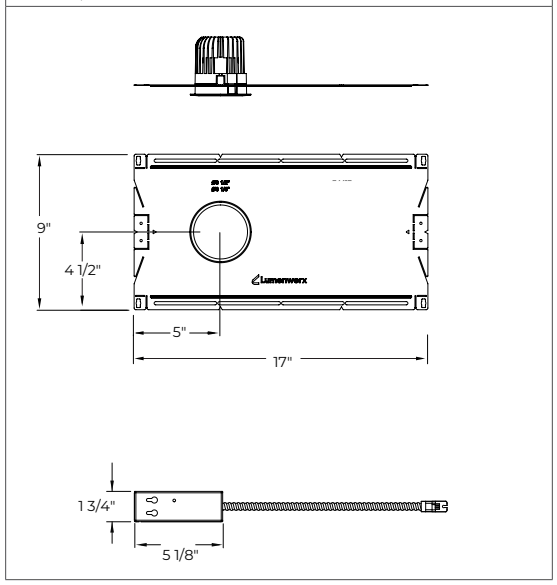


### PRE-MOUNT PLATE

2.5"

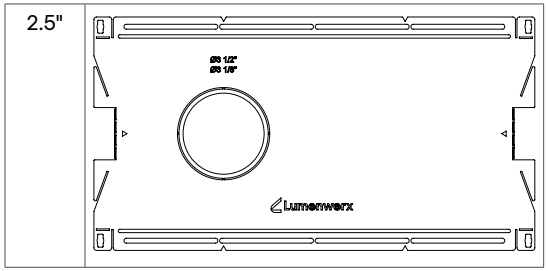

3.5"

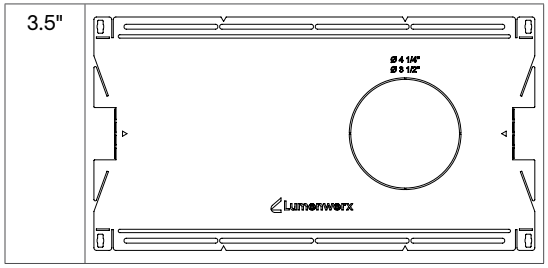

Each plate has the same dimensions overall. The opening hole for the light element will be provided depending on the model required.

# LIVV DOWNLIGHT
Remodel Pre-mount Plate (PMP)

Lumenwerx

## HOUSING INSTALLATION - PRE-MOUNT PLATE ONLY

### 1 POSITION PRE-MOUNT PLATE.

Position the pre-mount plate **[A]** approximately between ceiling supports **[B]** according to desired installation location.

**Note**: Make sure the face with the markings is facing down, for easier reading from below.

**Note**: Make sure the required opening in the pre-mount plate is not covered by a support beam.

VIEW FROM BELOW

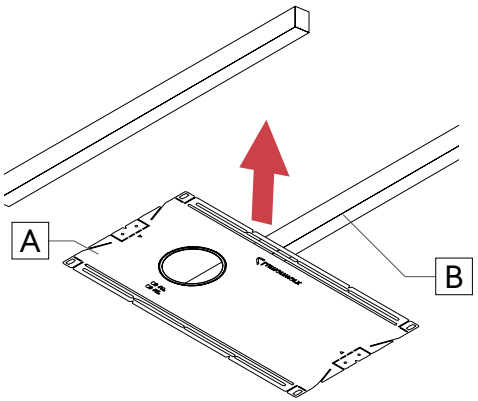


### 2 INSTALL PRE-MOUNT PLATE.

Secure the pre-mount plate **[A]** on the ceiling support **[B]** with nails or screws **[C]** at the slots opening. The pre-mount plate position can be slightly adjusted with the slots opening.

**Note**: Do not overtighten screws.

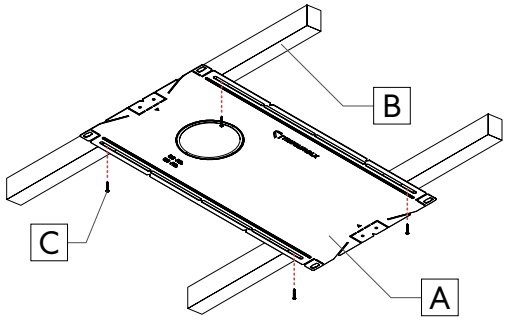


## HOUSING INSTALLATION - PRE-MOUNT PLATE WITH ADJUSTABLE BAR HANGERS (ASB)

### 1 INSTALL BAR HANGER.

Slide the bar hangers **[D]** into the caterpillar brackets **[E]** and adjust to the required length.

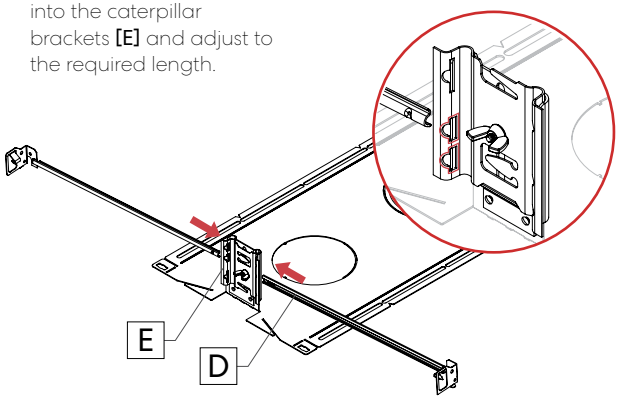


### 2 SECURE BAR HANGER.

Lock bar hangers **[D]** in place by twisting the caterpillar bracket's **[E]** tabs outwards with pliers.

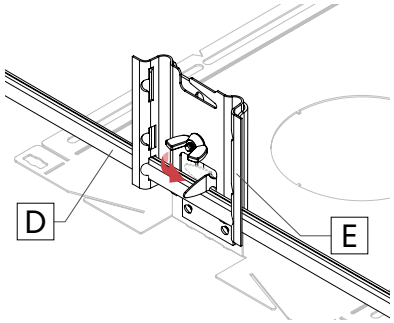


### 3 HOUSING INSTALLATION.

See housing installation section at page 7 and 8 of the downlight mounting option guide for the last step of the installation.

# LIVV DOWNLIGHT
Remodel Pre-mount Plate (PMP)

Lumenwerx

## HOUSING INSTALLATION - PRE-MOUNT PLATE WITH FLUSH MOUNT BARS (FMB)

### 1 INSTALL BAR HANGERS.

Slide the bar hangers **[D]** into the slots of the lateral tabs of the pre-mount plate **[A]**. Adjust to the required length.

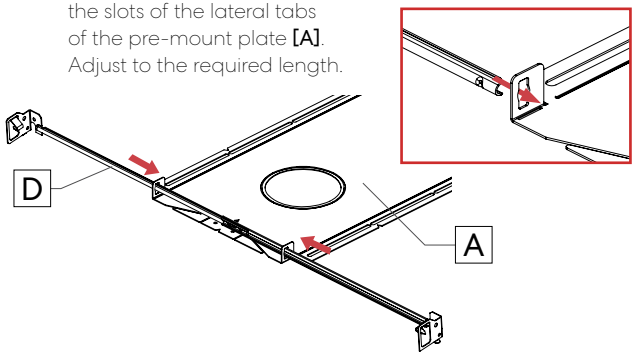


### 2 SECURE BAR HANGERS.

Lock flush bar hangers **[D]** in place by twisting the V shaped tabs **[F]** upwards on the pre-mount pan **[A]** with pliers.

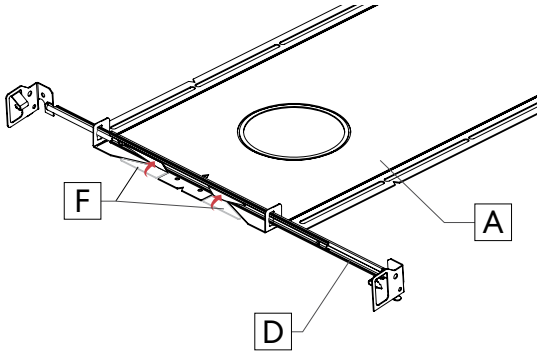


### 3 HOUSING INSTALLATION.

See housing installation section at page 7 and 8 of the downlight mounting option guide for the last step of the installation.

## HOUSING INSTALLATION - ADJUSTABLE COMMERCIAL BAR HANGERS (ACB)

### 1 INSTALLATION.

Install the housing by referring to the installation instructions in the downlight mounting option guide.

**Note**: Visual representation may differ. Follow both the bar hanger installation section and the housing installation for ACB.

# LIVV DOWNLIGHT
Remodel Pre-mount Plate (PMP)

Lumenwerx

## ELECTRICAL CONNECTIONS

### 1 MAKE ELECTRICAL CONNECTIONS.

Bring the connection box **[G]** close to the housing.

Unfasten screw **[C]** and pivot the cover **[H]**.

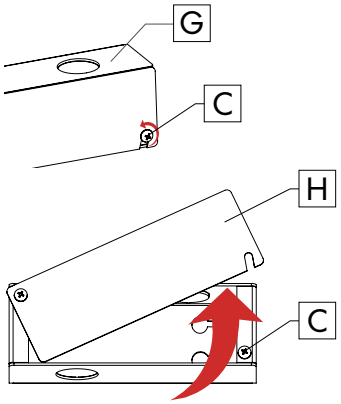


Push one of the knockouts on the connection box **[G]**. Install main power cable **[I]** to knockout opening.

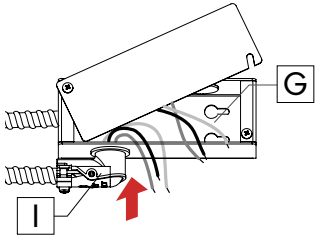


Make electrical connections between main power cable **[I]** and the adapter's cable **[J]** with wire nuts **[K]**.

**Note**: Number of wires may vary.

**Note**: For electrical connections, please refer to the wiring diagram guide.

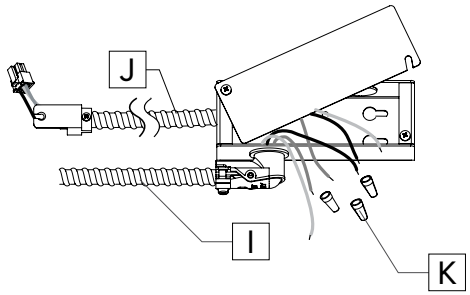


Reinstall the cover **[H]** by pivoting it back into place. Tighten the screw **[C]** to secure the cover **[H]**.

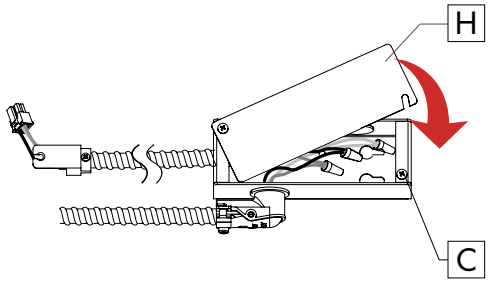


### 2 SECURE CONNECTION BOX.

Mount the connection box **[G]** by screwing it down on one of the nearby beams.

Use the keyholes at the back of the connection box **[G]** to secure it.

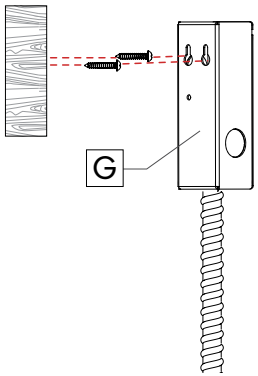


 © All rights are reserved to Lumenwerx ULC.
Lumenwerx ULC. reserves the right to change or modify product specifications without notification.

# LIVV DOWNLIGHT
Remodel Pre-mount Plate (PMP)

Lumenwerx

## CEILING PREPARATION

**2.5" TRIM / 2.5" DROP TRIM**

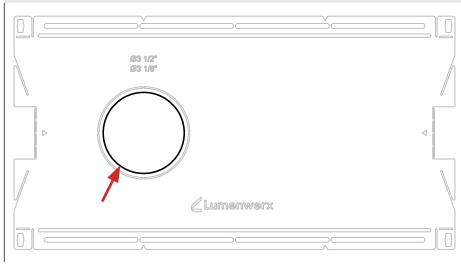

**3.5" TRIM / 3.5" DROP TRIM**

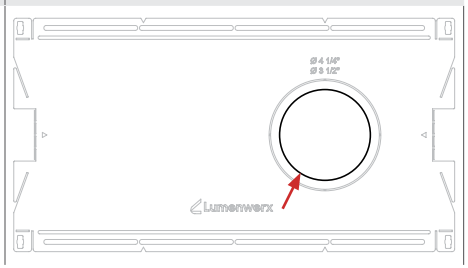

**2.5" TRIMLESS**

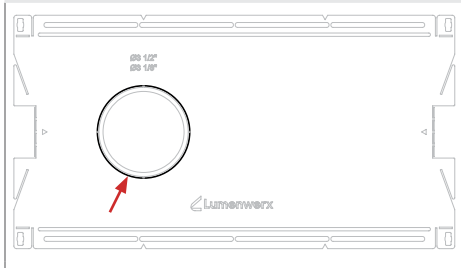

**3.5" TRIMLESS**

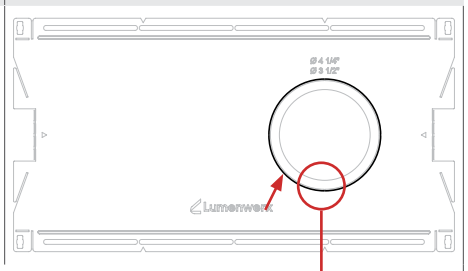

Openings can be made bigger by cutting at the tabs and removing the inner ring.

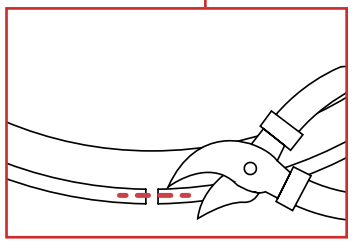

## 1 PREPARE CEILING.

### DRYWALL CEILING

Cut hole opening **[L]** in ceiling, according to shape and dimensions shown in table below.

**Note**: Refer to the table on the left to determine which opening to use for the chosen trim.

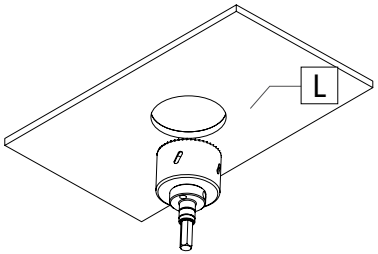


| | TRM | TLD | TLMP |
|---|---|---|---|
| 2 1/2" | Ø 3 1/8" | Ø 3 1/8" | Ø 3 1/2" |
| 3 1/2" | Ø 3 3/4" | Ø 3 1/2" | Ø 4 1/4" |

### MILLWORK CEILING

Cut opening in wood ceiling with a router. See diagram below for dimensions need to create the opening

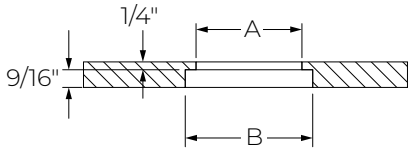


| | A | B |
|---|---|---|
| 2 1/2" | Ø 3 1/8" | Ø 3 5/16" |
| 3 1/2" | Ø 3 3/4" | Ø 4 1/16" |

### TRIMLESS MUDPLATE

Attach mudplate **[M]** to ceiling and fix with screws **[C]**. Plaster and sand over mudplate **[M]**.

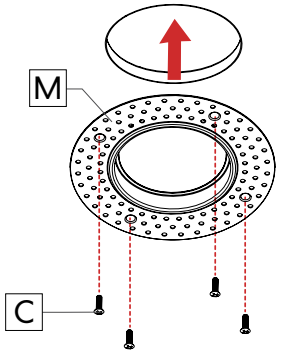


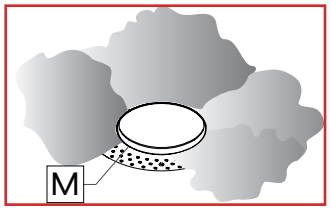

# LIVV DOWNLIGHT
Remodel Pre-mount Plate (PMP)

Lumenwerx

## LIGHT ELEMENT

### 1 CONNECT LIGHT ELEMENT.

Bring the light element **[N]** closer to the ceiling. Pull the armoured cable with the adapter **[J]** near the light element **[N]**.

Slightly pull out the connector **[O]** from the armoured cable with the adapter **[J]**.
Make connections between connector **[O]** and the light element **[N]**.

Insert the adapter into the slot. Secure the adapter **[J]** by tightening the screw **[C]** on top of the light element.

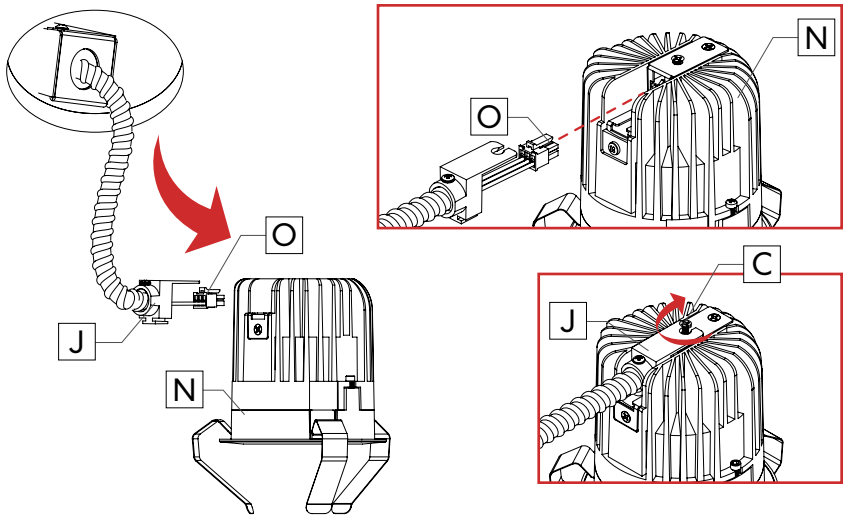


### 2 INSTALL LIGHT ELEMENT.

Squeeze the spring clips **[P]** upwards on the light element **[N]**. Insert the light element **[N]** into the opening until spring clips **[P]** snap back above the ceiling in the housing.

FLANGED TRIM OR DROP TRIM

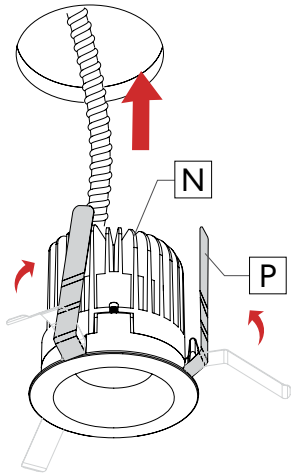


TRIMLESS MUDPLATE

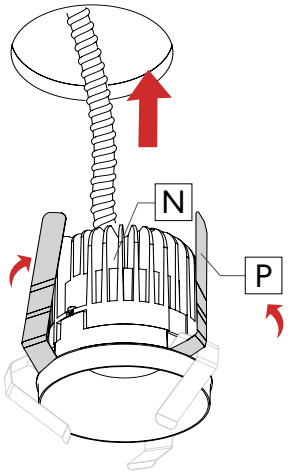


FLANGED TRIM

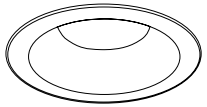

TRIMLESS MUDPLATE

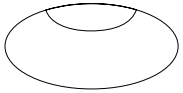

DROP TRIM

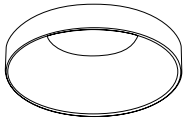



www.lumenwerx.com (T) 514-225-4304 (F) 514-931-4862 © All rights are reserved to Lumenwerx ULC.
Lumenwerx ULC. reserves the right to change or modify product specifications without notification.